Module 0 Homework 3 Challenge

Below is a scored review of your assessment. All questions are shown.

Earned 69,993 of 99,990 points. **70%**

Main Question Set

Solve six of the first ten questions to achieve a passing score of 60%. Don't miss the learning opportunity in the rest of the problems, though -- spend the full time and attempt every one of them!

Correct Answer Partially Correct Incorrect Answer

1 If you go 180 miles at a speed of 60 miles per hour, how many hours do you travel?

Your Answer	18060
Correct Answer	$180 \div 60$

Explanation

Recall that $\text{distance} = \text{rate} \times \text{time}$, so $\text{time} = \text{distance} \div \text{rate}$. So, the answer is just $180 \div 60$. An easy way to check this is to see that the units work out to hours:

$$\frac{180 \text{ miles}}{60 \frac{\text{miles}}{\text{hour}}} = \frac{180}{60} \text{ miles} \times \frac{\text{hour}}{\text{miles}} = 3 \text{ hours.}$$

2 Which one of these numbers is a factor of 12?

Your Answer	6
Correct Answer	6

Explanation

Since $12 = 6 \times 2$, 6 is a factor of 12. The next three choices are all multiples of 12 because $24 = 12 \times 2$, $36 = 12 \times 3$, and $120 = 12 \times 10$. And, lastly, the fifth choice, π, wouldn't make sense, as it isn't a whole number.

3 Is the product $31 \times 27 \times 161 \times 3$ odd or even?

Your Answer	Odd
Correct Answer	Odd

Explanation

You didn't multiply out all those numbers, did you? The trick is to realize that even numbers have a factor of 2, whereas odd numbers do not. All of the numbers in the product are odd, so their product has no factor of 2, and will be odd.

4 A group of kids from the Movie Appreciation Club bought several $\$7$ movie tickets for a total of $\$301$. Later, more kids joined the club and also bought $\$7$ movie tickets. The total amount became $\$343$. How many kids joined in the second phase?

Your Answer	6
Correct Answer	6

Explanation

Solution 1. The initial total of $\$301$ at $\$7$ per ticket means that $\frac{301}{7} = 43$ kids initially bought a ticket. The final total of $\$343$ means that $\frac{343}{7} = 49$ kids ultimately bought a ticket. Subtracting, $49 - 43 = 6$, so 6 additional kids bought tickets.

Solution 2. This question is solvable without calculating the total number of people at all. The total cost difference is $\$343 - \$301 = \$42$, which, at $\$7$ per ticket, means that $\frac{42}{7} = 6$ additional kids bought tickets.

Math Note. Even though 301 looks prime, it is actually 7×43. Also, we chose to use the important number 343 in this problem. You'll see 343 a lot, because it is $7 \times 7 \times 7$.

5 If you run towards a faraway friend at 5 miles per hour and she bikes towards you at 15 miles per hour, how many miles closer are you to each other after 1 hour? (Your answer should be the number only.)

✓	**Your Answer**	20
	Correct Answer	20

Explanation

Solution 1. In one hour, you move 5 miles closer, and your friend moves 15 miles closer, so the two of you are $5 + 15 = 20$ miles closer.

Solution 2. The above method suggests that instead of thinking about the different speeds you and your friend each travel at, we can instead think about the combined speed. Since you are moving in opposite directions, the *relative velocity* of your friend compared to you is 5 miles per hour plus 15 miles per hour, which is 20 miles per hour. So, in 1 hour, your friend moves 20 miles relative to you, and that is the answer.

6 If the area of a circle is 9π, what is its diameter?

Your Answer	6
Correct Answer	6

Explanation

Recall that the area of a circle is $\pi \times \text{radius}^2$, so if the area of the circle is 9π, then $\text{radius}^2 = 9$, and since the radius must be positive, we have that it is 3, not -3. Then the diameter is just double the radius, which means the diameter is $2 \times 3 = 6$.

7 Candidates A and B are running in an election with 100 voters. If 30 people will vote for Candidate A, what is the probability that a randomly chosen voter will vote for Candidate B, if each voter is equally likely to be chosen?

Your Answer	0.7
Correct Answer	0.7

Explanation

Since 30 people will vote for Candidate A, and there are 100 voters, then 70 people will vote for Candidate B. Hence, the probability that a person will vote for Candidate B is just $\frac{70}{100} = 0.7$.

8 How many factors does $2^4 \times 3 = 48$ have?

Your Answer	The prime factorization has 4 twos and 1 three, so there are $4 \times 1 = 4$ factors
Correct Answer	The prime factorization has 4 twos and 1 three, so 48 has $(4+1) \times (1+1) = 10$ factors

Explanation

Remember learning in the lesson about how to find the number of factors of a number? We discovered that each factor must be some portion of the prime factorization of 48. Any of 2^0, 2^1, 2^2, 2^3, or 2^4 divide 48, but not 2^5 or higher, so there are 5 choices for which power of 2 to use. Similarly, only 3^0 and 3^1 divide 48, so there are 2 choices for which power of 3 to use. This gives us a total of $(4+1) \times (1+1) = 10$ factors.

9 A car company makes three types of cars: sedans, SUVs, and minivans. They come in two colors: gray or blue. Of the cars, 30% are sedans, and of those sedans, 60% are painted gray. You randomly pick a car, with all cars being equally likely. What is the percent chance that the car is a blue sedan? Round your answer to the nearest whole percent, and don't write the % sign. (In other words, if the answer is 31.4%, you would type in 31.)

Your Answer	12
Correct Answer	12

Explanation

When picking a random car, the chance of picking a sedan is 30%. Of the sedans, 60% are not blue, and so 40% of the sedans are blue. So, the final probability of selecting a blue sedan is:

$$30\% \times 40\% = 0.3 \times 0.4 = 0.12 = 12\%.$$

10 It takes 2 hours to drive from your town to the next town at 55 miles per hour. Today you are in a hurry and drive 5 miles per hour faster. How many minutes does it take to drive today? (Your answer should be the number only.)

Your Answer	100
Correct Answer	110

Explanation

Solution 1. It takes 2 hours to drive to the next town at 55 miles per hour, so the next town is 110 miles away. Today's speed is 5 miles per hour faster than 55 miles per hour, which is 60 miles per hour, or one mile per minute. The next town is 110 miles away, so it will take 110 minutes to drive there.

Solution 2. This question is actually solvable without calculating the distance to the next town! Calculating that the new speed is 60 miles per hour, the ratio between the old speed and the new speed is $\frac{55}{60} = \frac{11}{12}$. Time has an inverse relationship with speed — the faster you go, the less time you take. So, the ratio between the old time and the new time will be the reciprocal of this ratio. This means the new time is $120 \text{ minutes} \times \frac{11}{12} = 110 \text{ minutes}$.

The most important idea here is that the ratio of the times is either the same or the reciprocal of the ratio of the speeds. So, you can often use common sense to decide whether to multiply or divide the old time of 120 minutes by $\frac{11}{12}$. Since you are going faster this time, you should multiply because $\frac{11}{12}$ is less than 1.

Earned 5 of 7 points. 71%

Bonus Challenge Questions

These optional questions will not count towards your final score. However, we strongly suggest trying them for the benefit of the challenge!

11 A line of 1000 switches are all set to off. Person 1 enters the room and flips every switch. Person 2 enters and flips every 2nd switch. Person 3 enters and flips every 3rd switch. This keeps on going, ending with Person 1000 flipping every 1000th switch (which is just the very last switch). Then, lightning strikes, and the first 100 switches in the line break (they turn off if they were on, and stay off otherwise). Which one of these equals the number of switches that are still on?

✓	**Your Answer**	The number of perfect squares from 101 to 1000
	Correct Answer	The number of perfect squares from 101 to 1000

Explanation

All switches from 1 to 100 are off, so we should only consider switches from 101 to 1000. Among those, a switch is on in the end if and only if it is flipped an odd number of times. As the nth person flips only switches which are multiples of n and there are as many people as switches, each switch s is flipped exactly by those people who are factors of s. Thus the answer is the number of numbers from 101 to 1000 which have an odd number of factors.

As we saw in the lesson, a number has an odd number of factors precisely when it is a perfect square, and so the answer is the number of perfect squares from 101 to 1000. To refresh your memory: you can pair up the factors of a number like 6 into $\{1, 6\}$ and $\{2, 3\}$, where each pair is of two factors that multiply to 6. However, if a number is a perfect square like 9, its square root (3) doesn't have another factor to pair with, and so there is an odd number of factors.

Alternatively, we can use the formula for the number of factors found in the lesson. As explained in the solution to an earlier problem in this set, the number of factors is the product of one more than the power of each prime factor. This is because from each prime factor we can choose a number to include from 0 to the power of the factor. Thus the number of factors is odd if and only if the power of each prime is even. This is true if and only if the number is a perfect square as we can find the square root by dividing all the

prime powers by two. Thus perfect squares are the only numbers with an odd number of factors.

12

You are standing still and observe trains coming towards you and passing by every hour at 60 miles per hour. You start biking at 15 miles per hour towards where the trains come from. From your perspective, what is the relative speed of the trains toward you now in miles per hour? (Your answer should be the number only.)

✓	**Your Answer**	75
	Correct Answer	75

Explanation

The train approaches you at 60 miles per hour while you approach the train at 15 miles per hour, so from your perspective on the bike, the relative speed of the train is $60 + 15 = 75$ miles per hour towards you.

13

You're driving down the interstate and get caught by a police officer for speeding. However, your speedometer showed you traveling at exactly 60 miles per hour, the speed limit. A burst of inspiration tells you that you actually were going faster than 60 miles per hour, because your tires were over-inflated! Instead of their normal 30 inch diameter, your tires have a diameter of 33 inches today. Your speedometer was wrong because it calculates speed based only on the spin rate of the tire, assuming that your tire's diameter is the normal 30 inches. How many miles per hour were you actually going? (Your answer should be the number only.)

Note: Your speedometer takes the spin rate of the tire in full rotations per unit time, and multiplies it by the circumference of a 30-inch diameter tire.

✓	**Your Answer**	66
	Correct Answer	66

Explanation

The ratio of your current diameter to the normal diameter is 1.1. Circumference scales linearly with diameter, which is a fancy way of saying that if you double your diameter, your circumference will also double. This means the distance you travel with every rotation is 1.1 times what your speedometer expects. Therefore, your actual speed was $60 \times 1.1 = 66$ miles per hour.

14 A chain runs over 6 gears in the pattern shown. Each gear has circumference 2 inches, the distance between the center of the top left gear and the center of the bottom left gear is 35 inches, and the distance between the center of the top middle gear and the center of the bottom middle gear is 5 inches. How many inches long is the chain? (Your answer should be the number only.)

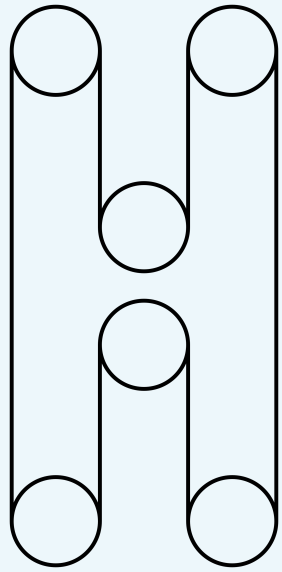

Your Answer	164
Correct Answer	136

Explanation

Each long straight segment is 35 inches long, so their combined chain length is 70 inches. The combined length of two short straight segments in the same column is $35 - 5 = 30$, because the gap between the short straight segments has the same length as the distance between the middle gears. So, the total length of all four short straight segments is $30 \times 2 = 60$ inches. Each gear has circumference 2, and the chain covers half the gear, so the total length of the round segments is $\frac{6 \times 2}{2} = 6$ inches. Altogether, the chain is $70 + 60 + 6 = 136$ inches long.

15

Alice starts jogging home from school at 8 miles per hour. One minute later, Bob sees that she had left her purse behind. He spends 15 seconds unlocking his bike, and then starts riding after her at 12 miles per hour.

If you were an ant riding on Alice, Alice would appear to be not moving, and Bob would appear to be the only one moving. The ant would think Bob is moving towards Alice. Bob's *relative speed* to Alice is the speed that the ant thinks Bob is moving towards Alice, and it is a positive number. What is the ratio of Bob's *relative* speed to Alice's *actual* speed? Enter your answer as a fraction in lowest terms with no spaces.

✓	**Your Answer**	1/2
	Correct Answer	1/2

Explanation

Alice goes at 8 miles per hour and Bob goes at 12 miles per hour, so Bob goes 4 miles per hour faster than Alice. This is Bob's relative speed. Since Alice's actual speed is 8 miles per hour, the ratio is $\frac{4}{8} = \frac{1}{2}$.

16

A standard running track is in the shape of 2 semicircles, joined by two straightaways. The innermost semicircles each have radius r, and all straightaways have length m. The track has 4 lanes encircling each other, and each lane has width w. What is the difference in length between the distance run around the track in the center of the innermost lane and the center of the outermost lane?

Your Answer	$2\pi \times 3w + 2m$
Correct Answer	$2\pi \times 3w$

Explanation

This problem is more laborious if you try to write out the two distances and then subtract! If we instead write out the difference directly, there are a few neat things to notice. The length of the straightaways doesn't change based on the lane used, so we can ignore them when thinking about the difference. The only thing that changes from lane to lane is the radius of the semicircle corresponding to the path through the center of the lane, and the two semicircles add up to one full circle.

It's easy to get tripped up here and assume that there are 4 lane widths between them, but note that there is only 1 lane width between the center of lane 1 and the center of lane 2. With a difference of 3 lane widths between lane 1 and lane 4, the difference between the radii of the semicircles corresponding to the centers of the innermost and outermost lanes is $3w$.

Remember from the lesson that an increase of x in the radius of a circle translates to an increase of $2\pi x$ in the circumference. Since our two semicircles add up to a full a circle, our final difference will be $2\pi \times 3w$.

17 You are standing still and observe trains coming towards you and passing by every hour at 60 miles per hour. You start biking at 15 miles per hour towards where the trains come from. How many minutes are there between times when successive trains pass by you now? (Your answer should be the number only.)

✓	**Your Answer**	48
	Correct Answer	48

Explanation

Solution 1. When you are standing still and a train passes by, the next train is 60 miles away because it will take another hour to reach your current point on the ground, and it is going at 60 miles per hour. So, successive trains are 60 miles apart. Once you start biking, the previous question shows that the trains are moving towards you at a relative velocity of 75 miles per hour. Since all that matters is the distance and speed in this case, you can imagine that this is equivalent to just one object moving at 75 mph toward a stationary object. By the rate equation $d = r \times t$, we can solve for the time t:

$$t = \frac{d}{r} = \frac{60}{75}.$$

Dividing by 15 on top and bottom to simplify the fraction, we get

$$t = \frac{4}{5}$$

hours. Converting to minutes by multiplying by 60, we get our answer of

$$\frac{4}{5} \times 60 = 48$$

minutes.

Solution 2. Using the idea of relative speed, your speed relative to the trains changes from 60 miles per hour (when you are still) to 75 miles per hour (when you are biking). So, the time between trains changes by the factor $\frac{60}{75}$. Since the time between trains passing used to be 60 minutes, it now becomes

$$\frac{4}{5} \times 60 = 48$$

minutes.

Earned 1 of 3 points. 33%

Super Bonus Questions

These questions are an extreme challenge! Some of the most interesting, creative and clever questions are the hardest ones. So try every single one. Even if you can't figure it out, you'll still be deepening your understanding of the important math concepts that underlie this course.

18 Alice starts jogging home from school at 8 miles per hour. One minute later, Bob sees that she had left her purse behind. He spends 15 seconds unlocking his bike, and then starts riding after her at 12 miles per hour. From the moment Bob starts riding, how many seconds will it take him to catch up with Alice? (Your answer should be the number only.)

✕	**Your Answer**	[no answer given]
	Correct Answer	150

Explanation

Solution 1. When Bob starts biking, Alice has been running at 8 miles per hour for 1 minute and 15 seconds, or

$$\frac{5}{4}\text{ min} \times \frac{1}{60}\frac{\text{hours}}{\text{min}} = \frac{1}{48}\text{ hours.}$$

She then, using $d = r \times t$, has an initial head start of

$$8\frac{\text{miles}}{\text{hour}} \times \frac{1}{48}\text{ hour} = \frac{1}{6}\text{ mile.}$$

Now, we can compare the distance that Alice goes with the distance that Bob goes. Let t be the number of hours Bob rides to catch up with Alice (the answer, but in hours). Add Alice's head start to her distance during time t, and you get $8t + \frac{1}{6}$ miles as her total distance. Well, Bob also took time t, but he went 12 miles per hour instead, so after t hours, he has traveled $12t$ miles. To find the time it takes Bob to catch up with her, we set these distance expressions equal to each other:

$$8t + \frac{1}{6} = 12t.$$

Subtracting $8t$ from both sides, we get

$$\frac{1}{6} = 4t.$$

Dividing both sides by 4, we find that $t = \frac{1}{24}$ hours. Converting to seconds, Bob takes

$$\frac{1}{24}\ \text{hr} \times 60\frac{\text{min}}{\text{hr}} \times 60\frac{\text{sec}}{\text{min}},$$

which is 150 seconds to catch up with Alice.

Solution 2. Here's a neat way to avoid a nasty computation: focus simply on Alice and Bob's relative speed. We found out earlier that Bob's relative speed to Alice is 4 miles per hour. This is half of Alice's actual speed of 8 miles per hour. So, if Alice had a head start of 1 minute and 15 seconds at her actual speed, then Bob will then take exactly twice that amount of time to catch up! The answer is then exactly double Alice's head start time, which is 2 minutes and 30 seconds, or 150 seconds.

19 Suppose it rains 20% of the time and you wear your poodle shirt 40% of the time, and the shirt you wear doesn't influence whether it rains (it's not magic). What is the percent chance that it rains, or you wear your poodle shirt, or both? (Enter just a number, without a % sign.)

✓	**Your Answer**	52
	Correct Answer	52

Explanation

Solution 1. The probability that it rains and you wear your poodle shirt is $20\% \times 40\% = 0.2 \times 0.4 = 0.08$. The probability that it rains and you don't wear your poodle shirt is 20% times the probability that you don't wear the poodle shirt, which is $20\% \times 60\% = 0.2 \times 0.6 = 0.12$. The probability that it doesn't rain and you wear your poodle shirt is $80\% \times 40\% = 0.8 \times 0.4 = 0.32$.

Thus, the total probability is $0.08 + 0.12 + 0.32 = 0.52 = 52\%$.

Solution 2. The probability that it rains or you wear your poodle shirt is $20\% + 40\% = 0.2 + 0.4 = 0.6 = 60\%$, except that this method double-counts the probability that it rains and you wear your poodle shirt. That probability is $20\% \times 40\% = 0.2 \times 0.4 = 0.08 = 8\%$, so the total probability is $60\% - 8\% = 52\%$.

Math Note 1. This technique, adding together two quantities and subtracting the overlap between them, will continue to be useful in the future.

Solution 3. The probability that it rains or you wear your poodle shirt is equivalent to 1 minus the probability that neither happens. There's a 0.8 chance it won't rain and a 0.6 chance you won't wear your poodle shirt, so there's a $0.8 \times 0.6 = 0.48$ chance it won't rain and you won't wear your poodle shirt. Then the total probability is $1 - 0.48 = 0.52 = 52\%$.

Math Note 2. Another common technique is finding the probability that something will not happen and then subtracting the probability from 1. This is known as complementary probability.

20

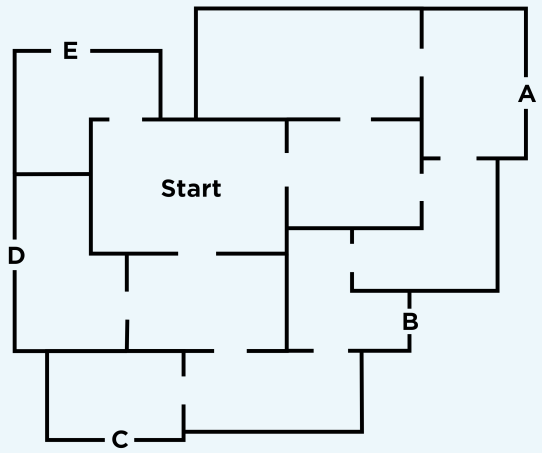

You wake up suddenly to find yourself in a strange building (see above floor plan), in the room marked Start. How can you find your way out? You must always enter a random door to a room you haven't yet been in until you find a room with an exit, at which point you leave. What is the probability that you exit the building via the exits A, B, or C, expressed as a fraction in simplest form with no spaces?

(Note that with these rules and this floor plan, you will always eventually exit the building.)

Your Answer	[no answer given]
Correct Answer	1/2

Explanation

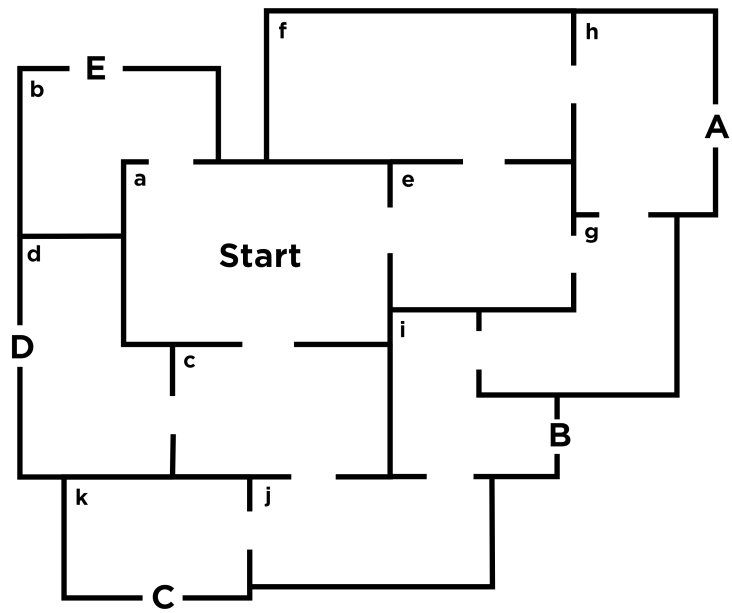

Solution 1. There is one possible path to exit C, going through rooms c, j, and k. You enter room c with probability $\frac{1}{3}$, then j with probability $\frac{1}{2}$, and then k with probability $\frac{1}{2}$, so the probability that you exit through c is $\frac{1}{3} \times \frac{1}{2} \times \frac{1}{2} = \frac{1}{12}$.

There are 2 possible paths to exit B, going through rooms c, j, and i, or rooms e, g, and i. You enter room c with probability $\frac{1}{3}$, then j with probability $\frac{1}{2}$, and then i with probability $\frac{1}{2}$, so the probability of exiting through this path is also $\frac{1}{12}$. You enter room e with probability $\frac{1}{3}$, then g with probability $\frac{1}{2}$, and then i with probability $\frac{1}{2}$, so the probability of exiting through this path is also $\frac{1}{12}$ and the overall probability of exiting through exit B is $\frac{1}{12} + \frac{1}{12} = \frac{1}{6}$.

There are 2 possible paths to exit A, going through rooms e, f, and h, or rooms e, g, and h. You enter room e with probability $\frac{1}{3}$, then f with probability $\frac{1}{2}$, and then h with probability 1, so the probability of exiting through this path is $\frac{1}{3} \times \frac{1}{2} = \frac{1}{6}$. You enter room e with probability $\frac{1}{3}$, then g with probability $\frac{1}{2}$, and then h with probability $\frac{1}{2}$, so the probability of exiting through this path is again $\frac{1}{12}$ and the overall probability of exiting through exit A is $\frac{1}{6} + \frac{1}{12} = \frac{1}{4}$. The probability of exiting through either A, B, or C is therefore $\frac{1}{4} + \frac{1}{6} + \frac{1}{12} = \frac{1}{2}$.

Solution 2. This can be solved significantly more quickly by instead calculating the complementary probability that you exit through D or E! You must exit the building, so the probability of exiting through A, B, or C must equal 1 minus the probability of exiting through D or E. The only way to exit through E is by immediately choosing room b with probability $\frac{1}{3}$, and the only way of exiting through exit D is by entering room c with

probability $\frac{1}{3}$ and then room d with probability $\frac{1}{2}$, for an overall probability of $\frac{1}{6}$. Therefore the probability of exiting through A, B, or C is equal to $1 - \frac{1}{6} - \frac{1}{3} = \frac{1}{2}$.

Summary

Software by
brillium
Version 11.2

Privacy Policy. Assessment content is copyright 2026, Expii, Inc..